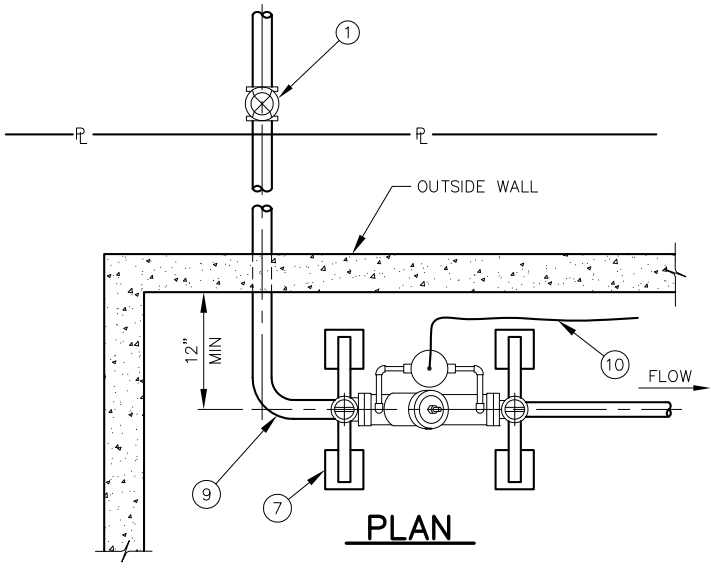

PLAN

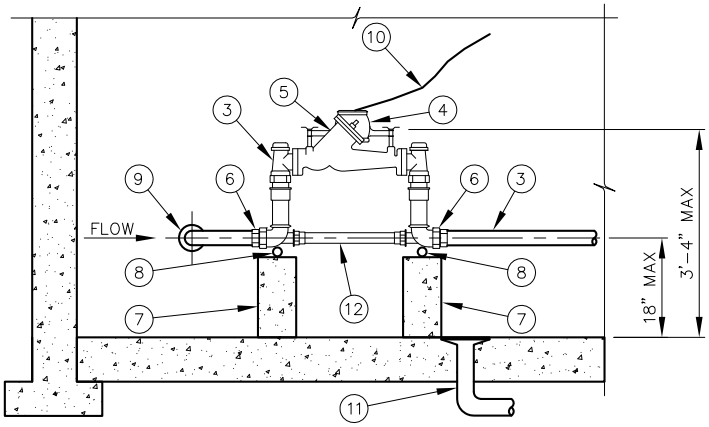

ELEVATION

KEY NOTES:

1. CURB STOP
2. TYPE "K" CU TUBING
3. 2" COPPERSETTER/METER YOKE–17" LAYING LENGTH, TWO–BOLT OVAL METER FLANGE
4. METER UNIT
5. DETECTOR CHECK VALVE
6. MALE IRON PIPE TO FLARE COUPLING FROM COPPERSETTER
7. 4"x 4"x 12" CONC BLOCK SUPPORTS
8. 1"x 18" BSP–40
9. 90° ELB
10. SIGNAL WIRE TO AMR DEVICE
11. FD
12. YOKE BRACE

NOTES:

1. INSTALLATION SHALL ALLOW FOR FULL ACCESS TO DETECTOR CHECK VALVE & METER, & PROVIDE PROTECTION FROM FREEZING.
2. A FLOOR DRAIN SHALL BE PLACED WITHIN 10' OF THE METER INSTALLATION IN THE SAME ROOM.
3. METER SUPPORT MAY BE EITHER CONCRETE OR STRUCTURAL CHANNEL ATTACHED TO WALL.
4. INSIDE DETECTOR CHECK VALVE SETTINGS ARE PERMITTED ONLY UNDER SPECIAL CIRCUMSTANCES, SHALL BE APPROVED AT THE TIME OF APPLICATION FOR THE FIRELINE, & ARE PERMITTED ONLY WHEN THE TOTAL LENGTH OF SERVICE PIPE FROM THE MAIN TO THE COPPERSETTER DOES NOT EXCEED 60'–0".
5. WALL PENETRATIONS SHALL BE GROUTED WITH CONCRETE.
6. COPPER METER YOKE (NO BYPASS) IN ACCORDANCE WITH MS–23.
7. 2" DETECTOR CHECK VALVE FEBCO CO. MODEL 406 AMES MODEL 1000 DCV HERSEY MODEL DC 9.

DENVER WATER
1600 West 12th Avenue•Denver, Colorado 80204
Phone(303)628–6000•Telecopier No.(303)628–6851

INSIDE SETTING FOR 2" DETECTOR CHECK VALVE

Scale: NONE	Date: November2013
Drawn: C.A.M.	Ck: K ROSS
Approved: Stephen C. Ramm	Dr. 127 No. 35